Meratch

Datasheet

# Integrated Radar Level Sensor

For continuous water level measurement with wireless data transmission.

| Parameter | Value |
|---|---|
| **Measurement range** | 0.2 m – 22 m |
| **Precision** | ± 2 mm |
| **Protection** | IP68, IK10 |
| **Temperature range** | -40 to +75 °C |
| **Network** | LoRaWAN, NB-IoT |
| **Measurement resolution** | 1 mm |
| **Radar beam width** | 10 ° |
| **Power** | 3.6 V, 14 Ah alt. 19 Ah |
| **Casing** | Ultrasonically welded |
| **Dimensions** | Φ 106 mm, 63 mm |
| **Weight** | 300 g |
| **Measurement method** | Nanoradar |

## Battery lifetime*

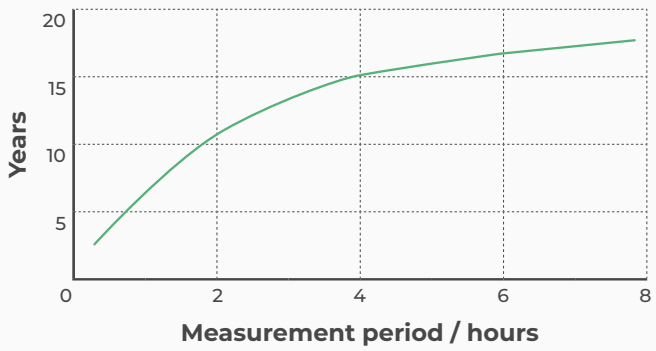


* Valid for LoRaWAN and NB-IoT. Measurement period equals data send period.

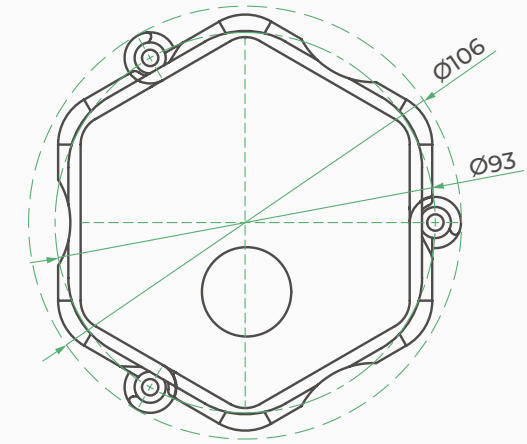


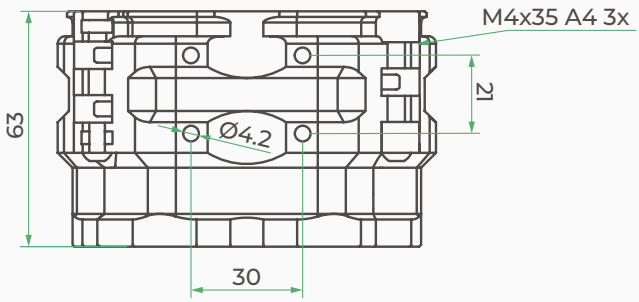


Dimensions in mm.

Meratch

# Radar Level Sensor

### Easy Setup & Robust
IP68, IK10, install in 20 mins.

### Data Integrity
High quality electronics, advanced data quality control.

### Redundant Communication
LoRa, NB-IoT, 2G.

### Friendly App
Alerts, data interpretation. Easy installation and operation.

- Low power consumption. Lifetime up to 10 years.
- Multiple mounting options via adapter.
- Maintenance-free, non-contact 60 GHz technology.
- Deployable anywhere in the world.

## Use cases

- Flood warning systems
- Wells and borehole monitoring
- Sewage & wastewater monitoring
- Tank capacity measurement
- Ship weighting
- Automated insurance claims


Contact us
info@meratch.com


POWERED BY GOSPACE LABS